QIP course on
‘Smart Grid Technology’

Distribution Management System

Presented by:
Dr. Abheejeet Mohapatra
Assistant Professor
Department of Electrical Engineering
IIT Kanpur
abheem@iitk.ac.in

Typical Active Distribution Network

Components of Distribution Network

- AC and DC Loads
- Renewable Energy Sources
- Energy Storage Devices
- Protective Devices

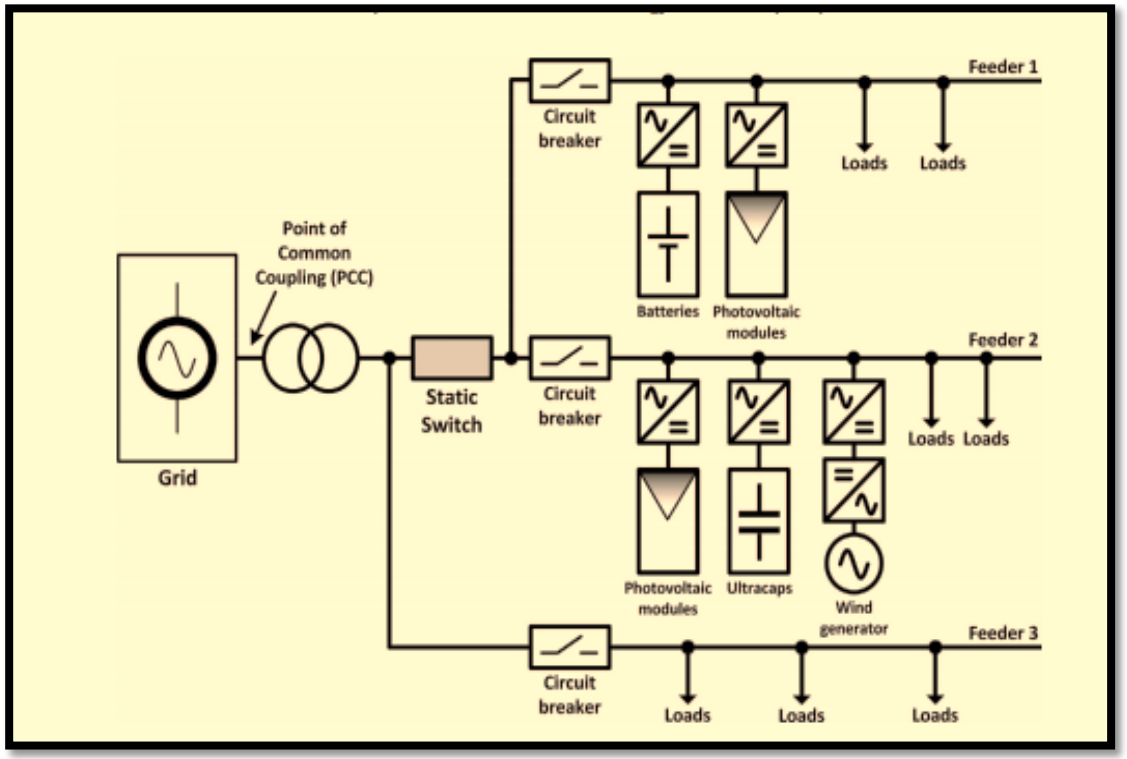

Typical configuration of distribution network

- Radial
- Looped
- Networked Primary and secondary

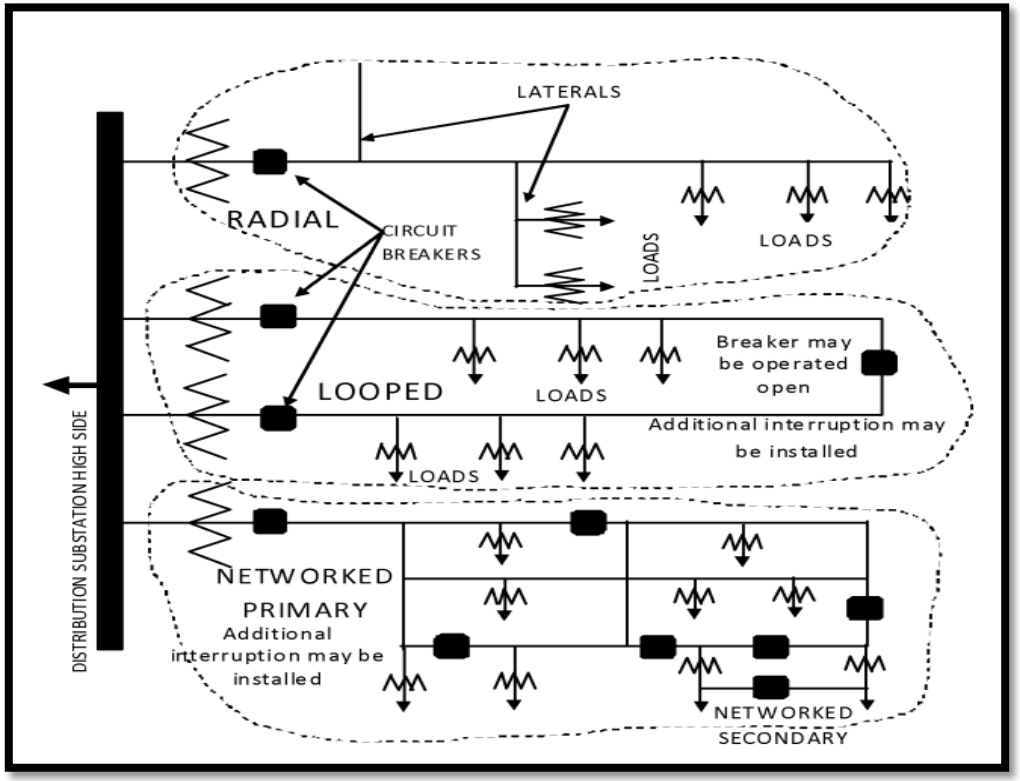

Need of Distribution Management System (DMS)

Demands of the customers should be met economically and reliably.

- ❖ Economy : Low operational cost, low losses, best customer services
- ❖ Reliability: Power quality and availability

In other words, a balance between supply and demand is maintained.

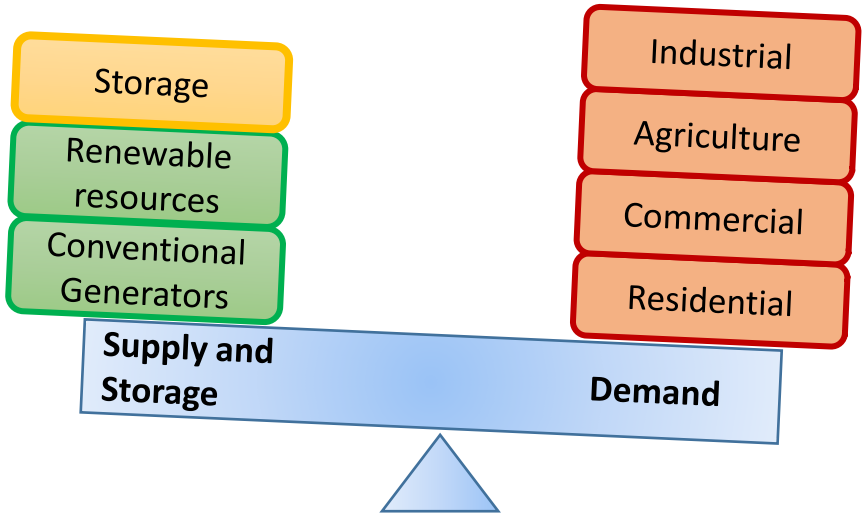

Requirement of Distribution System

To have a Decision Support System to assist the control room and field operating personnel with the monitoring and control of the electric distribution system in an optimal manner while improving safety and asset protection

Distribution Management System

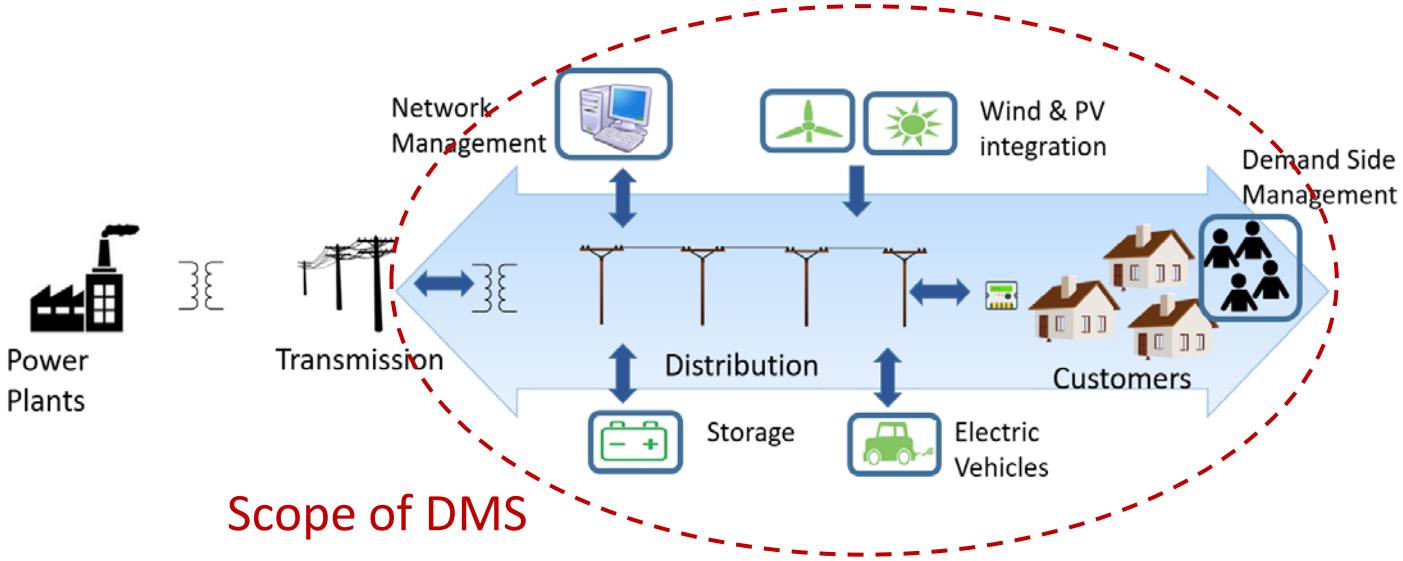

Basic DMS Functions

- DSSE — Distribution System State Estimation
- NCA — Network Connectivity Analysis
- LFA — Load Flow Analysis
- VVC — Volt-Var Control
- ILSR — Intelligent Load Shedding and Restoration
- FMSR — Fault Management & System Restoration
- LBFR — Load Balancing via Feeder Reconfiguration
- FDN — Forecasting in Distribution Networks

Advanced DMS Functions

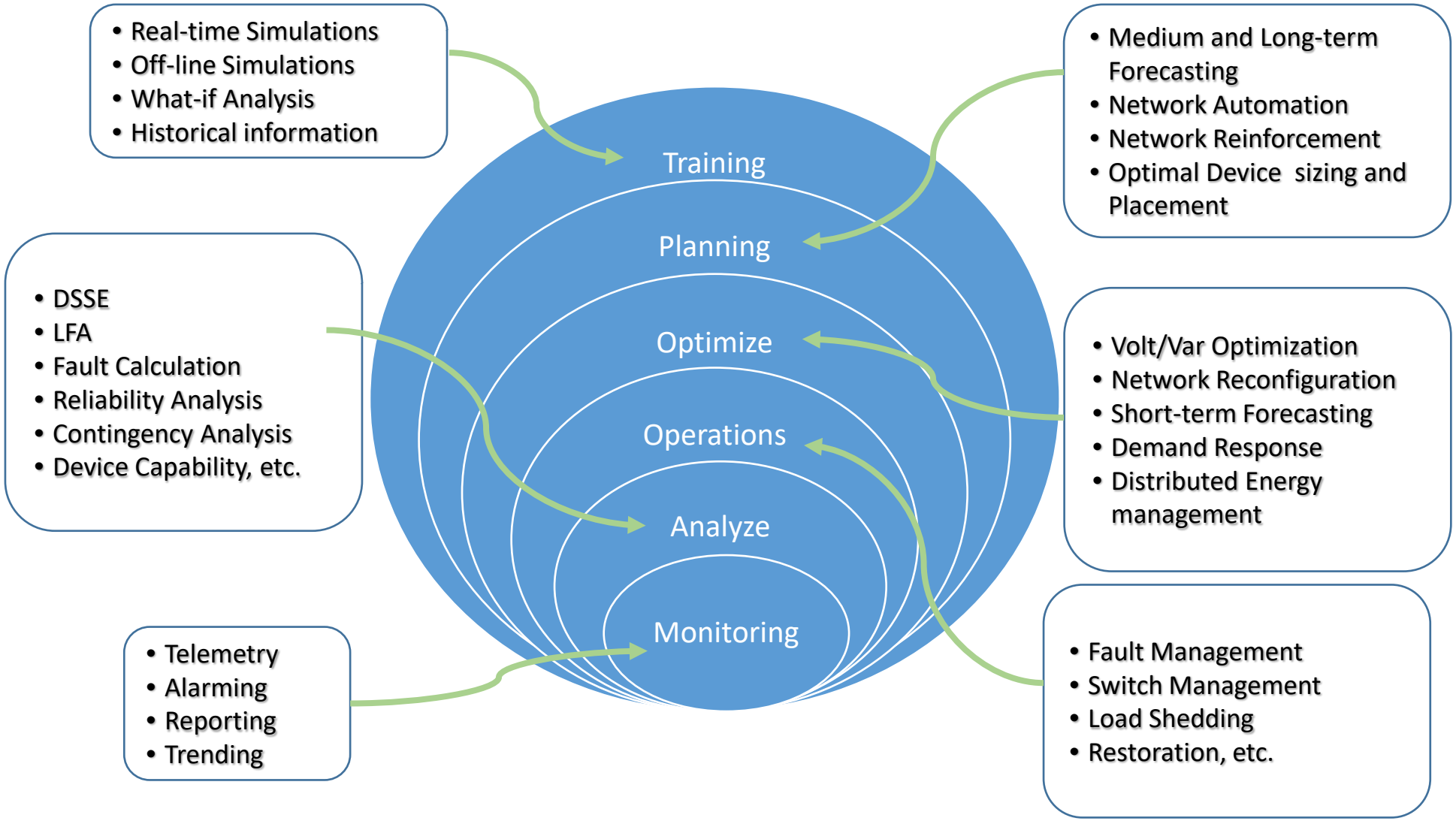

Distribution System State Estimation (DSSE)

Core driver of other DMS functions

Calculates system states (voltages and phase angle) based on real time measurements

DSSE faces challenges such as

- unobservable system due to lack of sufficient measurements
- unbalanced/ incorrect network topology
- exposure to cyber attacks and bad data
- delayed or missing measurements

Challenges in hybrid measurement devices - different standards and data integration

Need for real-time system to simulate field measurements

DSSE Contd.

Differences in DSSE, as compared to transmission system state estimation are

- High R/X ratio due to shorter line lengths
- Unobservable system due to lack of measurement sources
- Complex measurement functions due to unbalanced phases
- Missing lines and zero injections
- Scalability
- Poor convergence due to high condition number of gain matrix

DSSE Contd.

- Typical techniques – least square estimation, Kalman filter
- Obtained states significantly depend on
  - System topology obtained from NCA
  - Bad data detection, identification and correction process
  - Availability and time stamping of obtained measurements from various meters
- Large number of bad data affects the computational time of DSSE
- Cyber attacks pose additional challenge in DSSE
- Measurements are hybrid in nature – micro PMUs, RTUs, IEDs
- Measurements arrive at different times and hence, measurement utilization and synchronization in DSSE is a challenge
- Need for statistical techniques for robust DSSE

Network Connectivity Analysis

- Evaluates connectivity between various network elements
- Is done in coherency/ parallel to DSSE
- Operates with the help of metered data in real-time
  - Bus connectivity (Live/ dead status)
  - Feeder connectivity
  - Abnormally energised sections
  - Grounded network sections
  - Loop detection
  - Status of Circuit Breakers/ Isolators

Load Flow Analysis (LFA)

- LFA provides bus voltage magnitudes and associated phase angles for specified bus injections and network topology and parameters
- DSSE is a real time system monitoring exercise
- LFA is an offline exercise used for analysing the impact of possible future scenarios on the present system
- Compared to transmission system, distribution system LFA has the following differences
  - High R/X ratio
  - Matrix ill-conditioning – Newton's based approach fails
  - Mostly three phase unbalanced analysis
- Several direct/ indirect, recursive/ non-recursive non-Newton based techniques for distribution system LFA

LFA Contd.

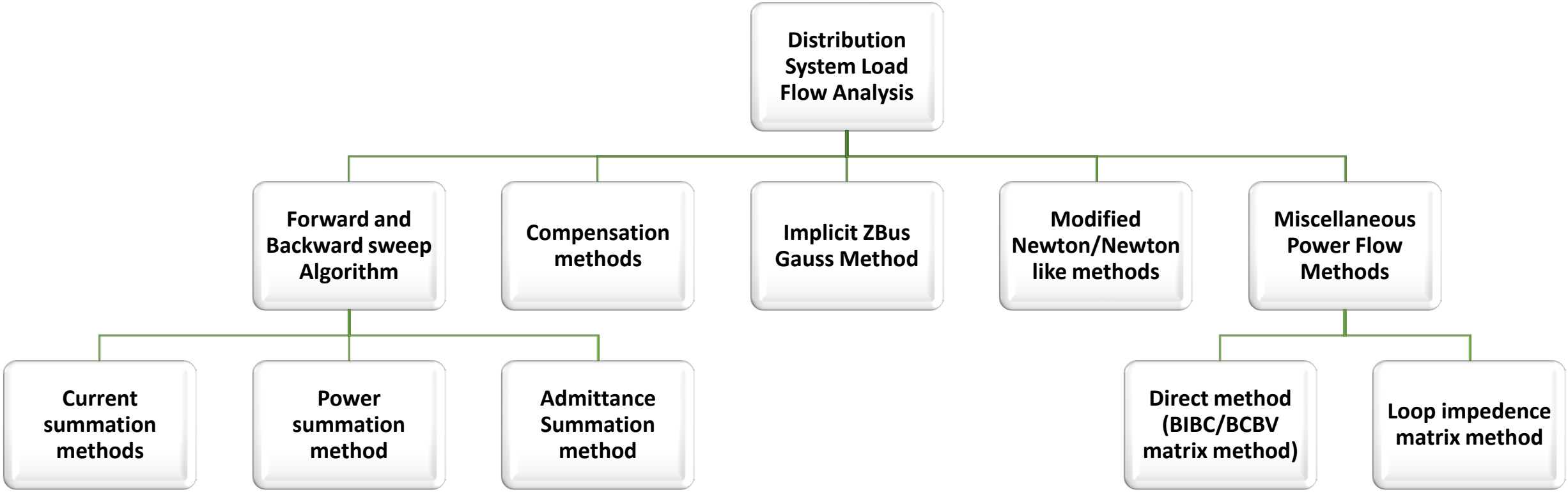
Distribution System Load Flow Analysis
Forward and Backward sweep Algorithm
Compensation methods
Implicit ZBus Gauss Method
Modified Newton/Newton like methods
Miscellaneous Power Flow Methods
Current summation methods
Power summation method
Admittance Summation method
Direct method (BIBC/BCBV matrix method)
Loop impedence matrix method

Volt - VAr Control (VVC)

OBJECTIVE

- Active loss minimization
- Load demand reduction
- Savings
- A weighted sum approach

CONTROLS

- Capacitor banks
- OLTCs, Voltage regulators
- Smart Inverters

CONSTRAINTS

- No. of tap and capacitor bank operations
- Voltage magnitude across the feeder
- Inverter operational limits
- Storage state of the charge

- Maintain acceptable node voltages under all loading conditions in offline/ real time across a day
- Requires coordinated control of voltage regulation and reactive power control systems
- Determines the best set of control actions for all voltage regulating devices and VAR control devices to achieve the objectives without violating the fundamental operating constraints

VVC Contd.

Conventional Distribution Loss Reduction Methods	• Capacitor Banks • OLTC
Smart Meters	• Load Profile • Real-time V/I/PF Data
Volt/VAr Optimization	• Multi Level: Offline + Real time • Smart Inverters
Conservation Voltage Reduction (CVR)	• Dynamic consumer Voltage Reduction • Adaptive voltage regulators and OLTCs • Smart Inverters, peak load reduction
Volt/WATT Optimization	• To squeeze maximum real power during availability • To reduce the burden on energy storage devices

Adaptive Real-Time CVR and Volt/VAr Optimization

VVC – Optimization: Then and Now!

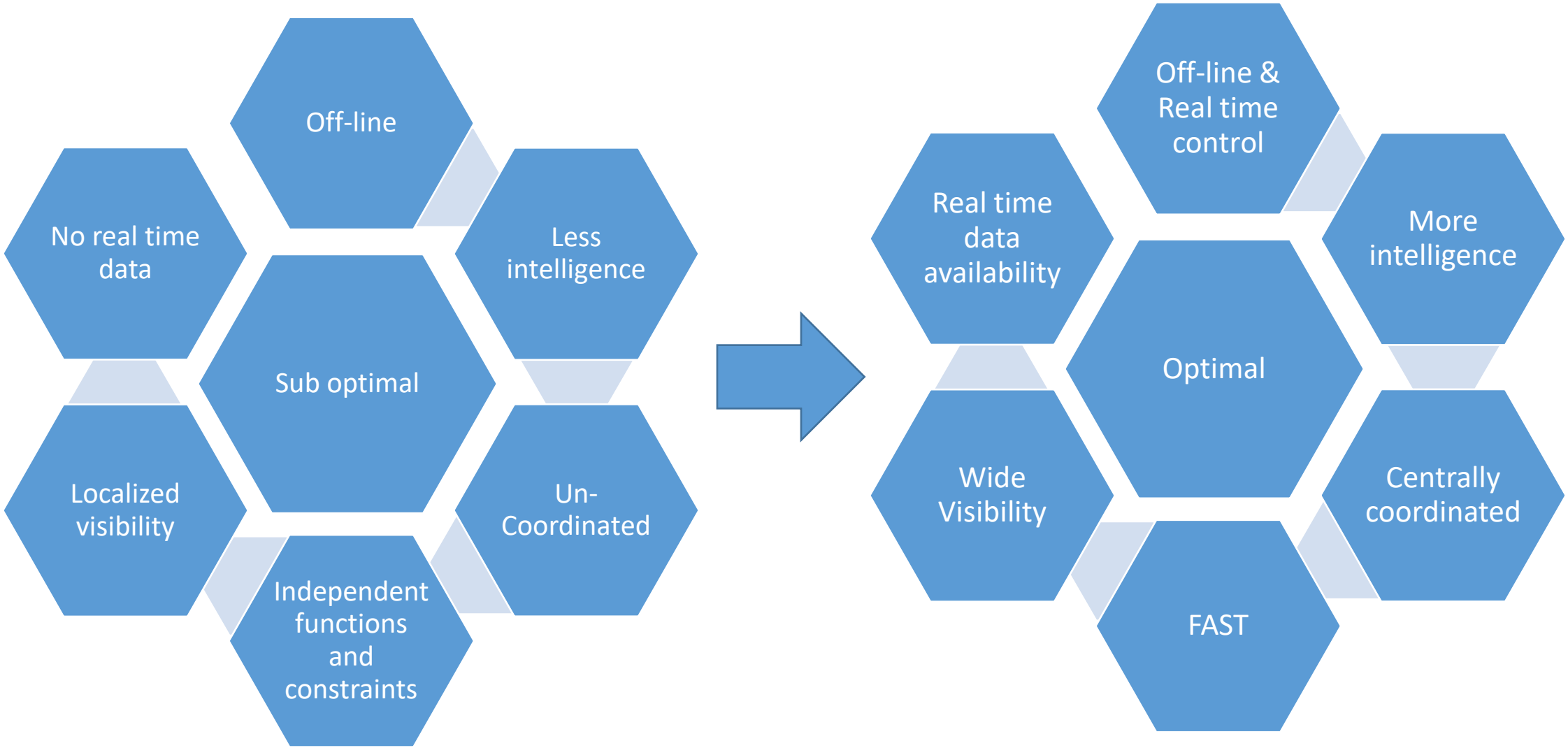

VVC in active distribution networks: How?

Both day-ahead and real time control of devices which can manage reactive power and instruments which can control voltage magnitudes

For day-ahead control, optimization engine is run to meet the objective(s) by finding the optimal settings of slow acting devices such as OLTCs, VRs and capacitor banks based on forecasted loads and renewable resources generation and desirable storage requirement

For real time control, quick control actions are implemented over and above the day-ahead controls by exploiting the speed of action of inverters and storage based on real time change in loads as well as generation of renewable resources (or any other system uncertainties!)

Intelligent Load Shedding & Restoration (ILSR)

Intentional Load Shedding	• This is an operator initiated load shedding sequence, which will trip selective feeders based on the date and time of day.
Under Frequency Load Shedding	• This is an automatic load shedding sequence, where if the grid frequency drops below a certain threshold, then a group of feeders need to be tripped immediately.
Transformer Overload Load Shedding	• This is also an automatic load shedding sequence, which is initiated when the total power flow through a transformer exceeds a certain threshold.
Distributed Load Reduction	• This is required when the overall drawl from the grid for the utility is above the scheduled/granted drawl.
Function Performed by RTU and/or SCADA	• This is required for telemetry and control.

Demand Side Management (DSM)

World Bank definition:

Systematic utility and government activities designed to change the **amount and/or timing of the customer's use of electricity** for the collective benefit of the society, the utility and its consumers.

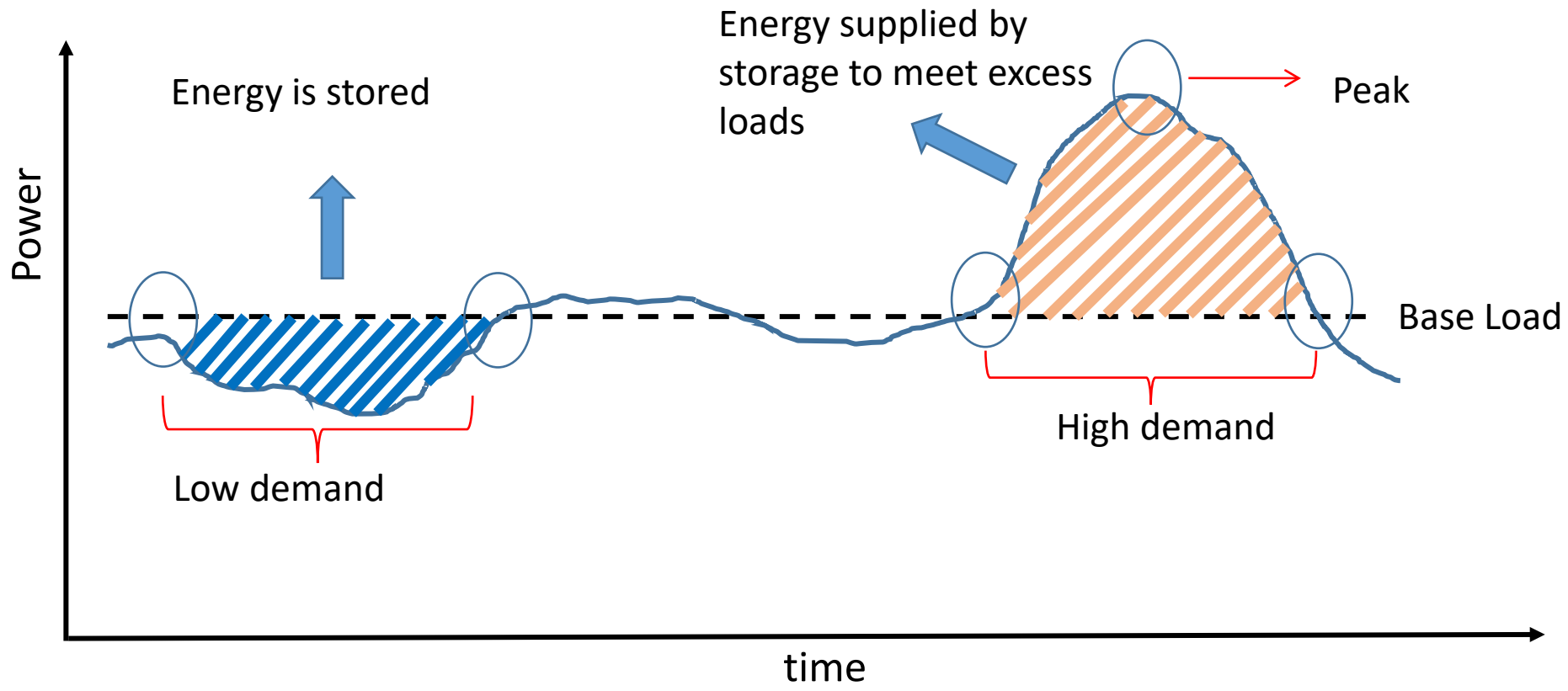

DSM Contd.

Reduce/shift demand → Demand reduction → Price reduction

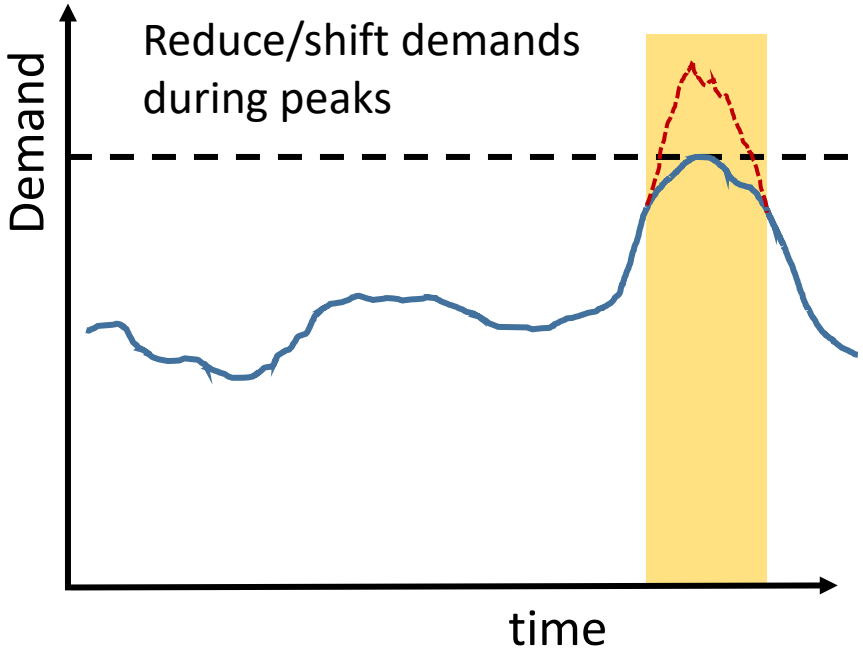

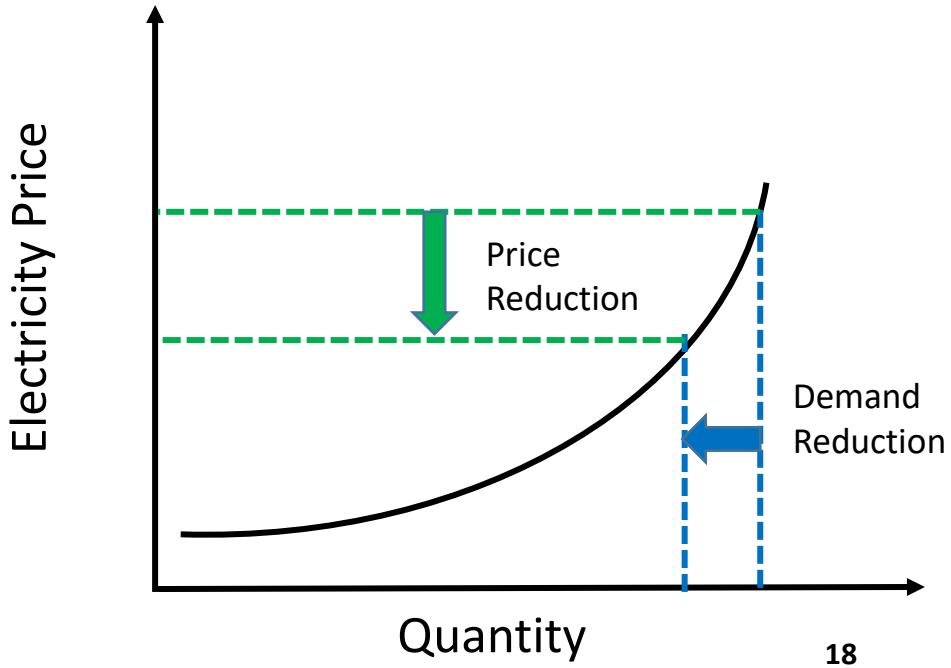

Benefits of DSM

DSM focuses on **efficient usage and allocation** of available resources rather than going for **additional capacity installation**

Customer Benefits	Utility Benefits	Societal Benefits
Satisfy electricity demands	Lower cost of service	Reduce environmental degradation
Reduce / stabilize costs or electricity bill	Improve operating efficiency, Flexibility	Conserve resources
Maintain/improve lifestyle and productivity	Improve customer service	Protect global environment

DSM strategies

	Strategy	Aim	Impact on Energy Demand	Impact on Peak Demand
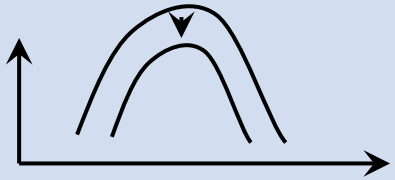	Energy Conservation	Reduce the overall energy demand (energy conservation)	↓	↓
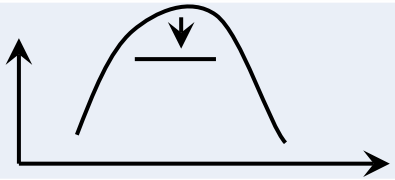	Peak Clipping	'Clip' demand at peak load periods (load levelling)	↓	↓
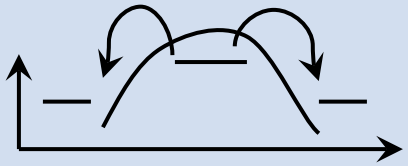	Load Shifting	Shifting to off peak hours (load levelling)	No change	↓
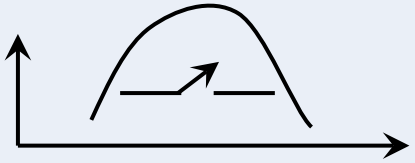	Flexible Reliability	Induce change in load as per supply (load controlling)	May reduce	↓
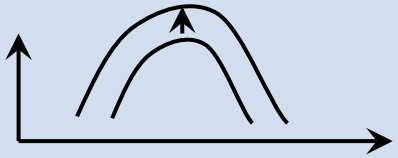	Strategic Load Growth	Promotion of applications requiring electricity – electric vehicles	↑	May increase
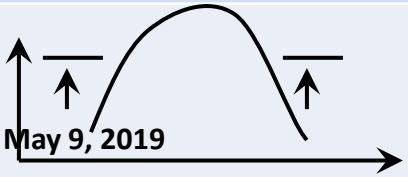	Valley Filling	Increasing load during off peak hours (load levelling)	↑	No change

Protection in Distribution Networks

- Typically, Overcurrent (OC) relays have been conventionally used for protection of passive distribution networks
- Load – way and loop – way level – directional OC relay
- In current microgrid framework
  - Use of differential relays for unit protection schemes
  - Adaptive fault current limiters
  - Adaptability to varying system conditions

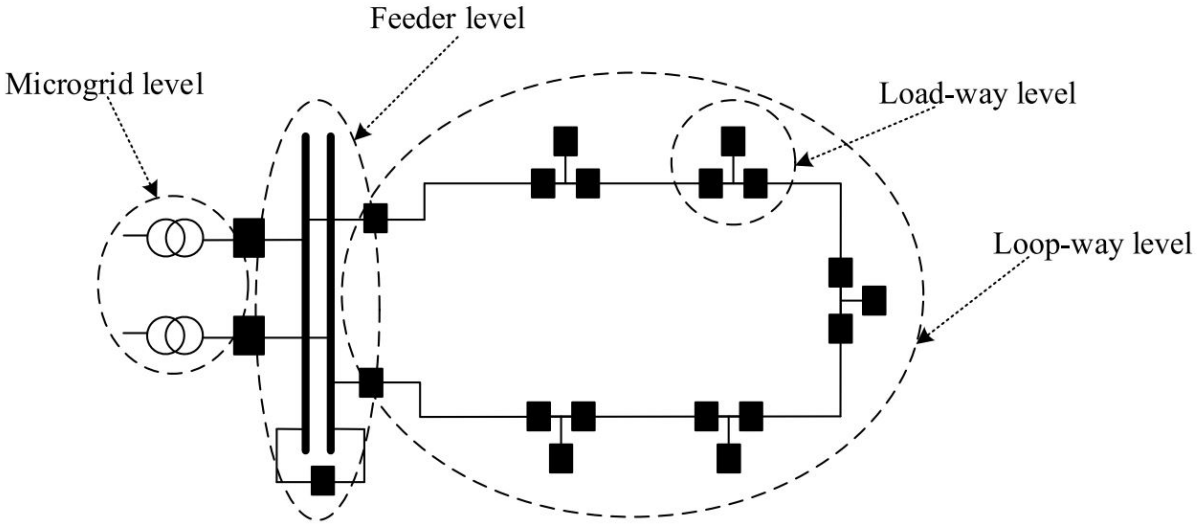

Protection in active distribution networks: Challenges

1. Malfunction of relays due to downstream faults:

- In a downstream fault, utility grid and DER unit currents (Ig and DER, respectively) contribute to the total fault current.
- Interfaced DER is large, Ig is low because of a higher voltage contributed by DER at PCC.
- PD1 may not trip because of a lower fault current even though feeder 1 experiences a higher fault current.

2. Sympathetic tripping:

- PD3 should trip to clear the fault.
- If DER unit contribution to the fault current is large, PD2 may trip in response to high current DER, which would disconnect feeder 2 from the utility grid.

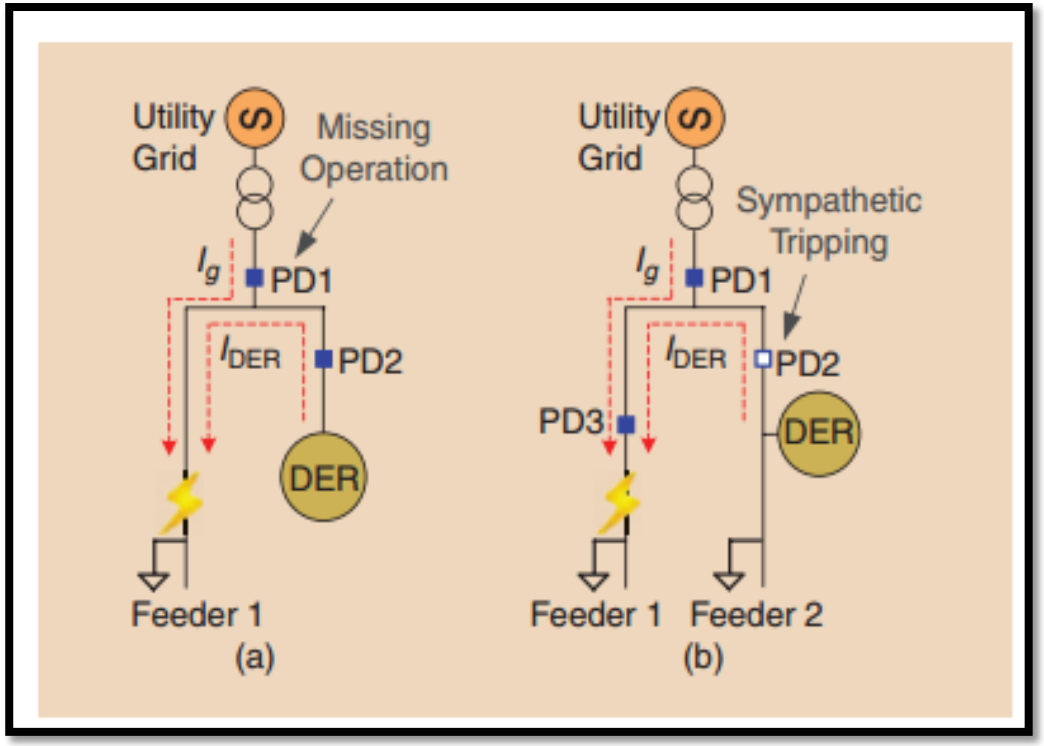

Figure : The impact of DER units on relay operation.
(a) The malfunction of PDs due to downstream faults and
(b) The sympathetic tripping of PD.

Fault Location, Isolation and Service Restoration (FLISR)

➢Objective of FLISR

- Distribution automation application.
- Reduce outage time to the end customers.

➢Problem due to the fault:

- Substation feeder protection normally shuts-down power on the entire feeder.
- Disruption in the service to many end-user customers, including industrial, hospitals, commercials and residential loads.

How FLISR can reduce outage time?

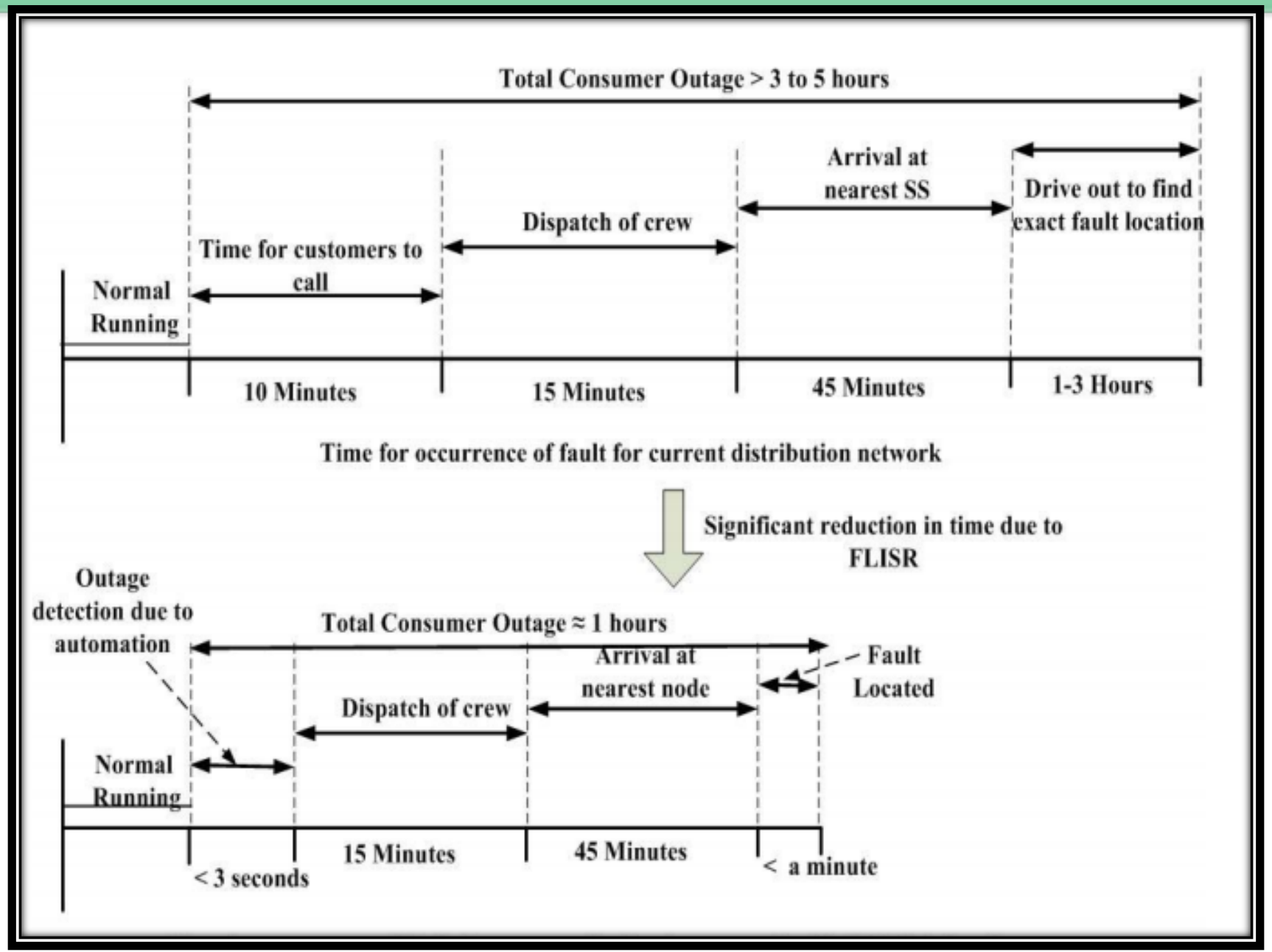

Steps in FLISR

Fault location (followed by fault detection):

- Triggered by substation protection devices (Intelligent Electronic Device, IED or recloser controller).
- After faulty feeder tripping, the faulty section on the tripped feeder needs to be located

Fault isolation:

- After identifying faulty feeder section, both sides of fault need to be isolated using switches/ reclosers.

Capability Estimation:

- After isolation and before restoration, a capability estimation need to be carried out to determine if service restoration from a healthy feeder is possible

Service Restoration:

- From capability estimation, it is determined whether complete or partial load of the faulty feeder can be transfer to healthy feeder
- Accordingly, the service restoration process closes tie-switch and corresponding feeder switches (which can feed healthy portion of the faulty feeder)

FLISR Architectures

1. **Centralized FLISR (C-FLISR)**
   - Each relay communicate to control center directly
   - high bandwidth communication network
2. **De-Centralized FLISR (DC-FLISR)**
   - DC-FLISR system deployed at substation level using a single or a redundant automation device installed in each substation.
   - Remote I/O modules installed at each switch/recloser locations connected to the distribution substation automation device over communication network
   - faster with lower bandwidth requirements.
3. **Distributed FLISR (D-FLISR)**
   - D-FLISR uses controlled devices at each switch/recloser locations
   - These communicate among each other to determine where the fault has occurred and to determine the appropriate switching actions necessary for the restoration.

➢ IEC 61850 **Generic Object Oriented Substation Events (**GOOSE) based peer-to-peer communication technology is a good fit for such applications.

Contingency in Microgrid

Upon occurrence of a contingency, microgrids will experience one of the following situations:

1. Fault:

   Disconnection of all the load or partial load

2. Grid-Connected:

   After fault isolation, some sections/ microgrids might be able to import the required power from upstream network or inject their excess power to it

3. Islanded:

   Fault isolation might disconnect some microgrids/ sections from the upstream network. In this case, microgrids may or may not continue supplying loads in islanded mode

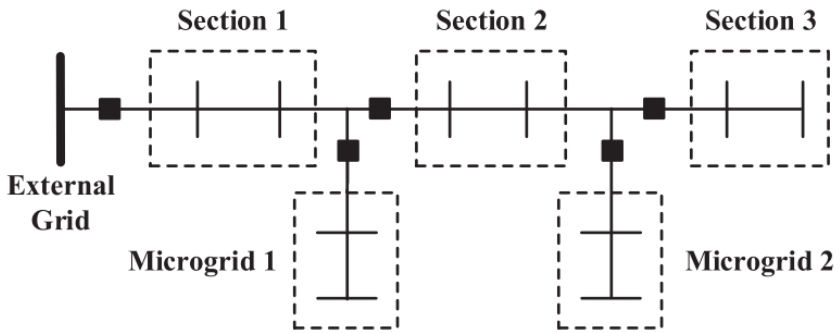

Fig. Sample system for illustrating different operating modes.

Data/Methods for fault location

- Apparent impedance measurement
- Direct three-phase circuit analysis
- Superimposed components
- Traveling waves
- Power quality monitoring data
- Artificial intelligence/ machine learning approach

Network Reconfiguration

Network reconfiguration can be defined as **altering the topological structure of feeders** by changing the open/closed status of the sectionalizing (normally closed) and tie (normally open) switches

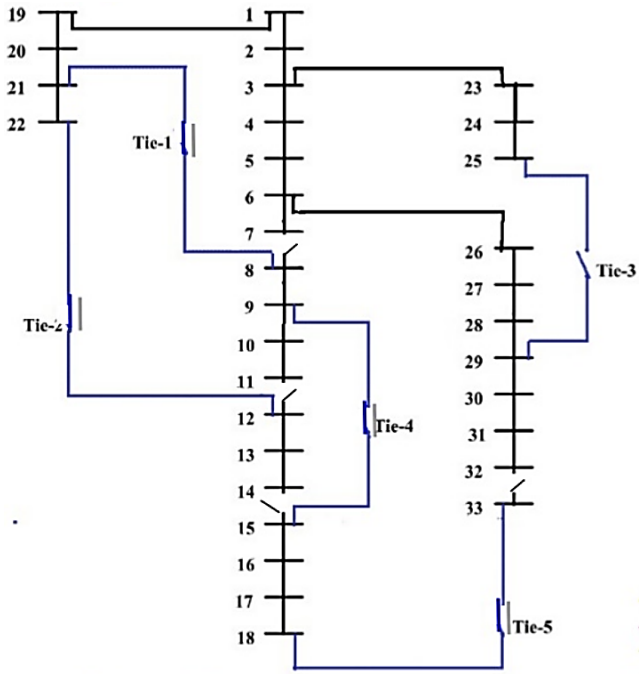

Constrains

- Transformer capacity
- Feeder thermal capacity
- Voltage drop

Normal Condition

- Minimization of losses
- Reliability improvement
- Load balancing

Faulty Condition

- Isolation of faulty line
- Maximum service restoration

Need for reconfiguration

Need for network reconfiguration	Depending on the current loading conditions, reconfiguration may become necessary in order to **eliminate overloads** on specific system components such as transformers or line sections. In this case, it is called load balancing.
	For reducing **real power losses** in the network, reconfiguration can be done. This is usually referred to as network reconfiguration for loss reduction
	To **maximize reliability** of the system.
	During **line outag**e or schedule maintenance of line.

Process for Offline Reconfiguration

Read input data

- Read initial status of switches before reconfiguration

Perform load flow

- Find total power losses for above initial state

Permutation combination

- Find all possible configuration such that system is radial and all load are connected

Run load flow

- Now run load flow for all above possible configuration

Calculate power losses, Reliability for each configuration

- Calculated total power loss and reliability for above all possible configuration

Unbalance Minimization In Distribution System

Unbalances in the system increases mostly due to the following reasons

- Increase in number of single phase loads
- Connection of sources in single phase modes (Solar PV) and due to the uncertainty associated with them
- Uncertainty due to loads such as Electric Vehicles
- Due to increased harmonics (Power Electronics interfaces)

Voltage drops can be very high due to the unbalances which is an unwanted scenario

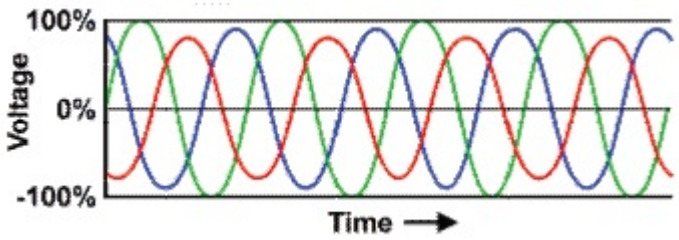

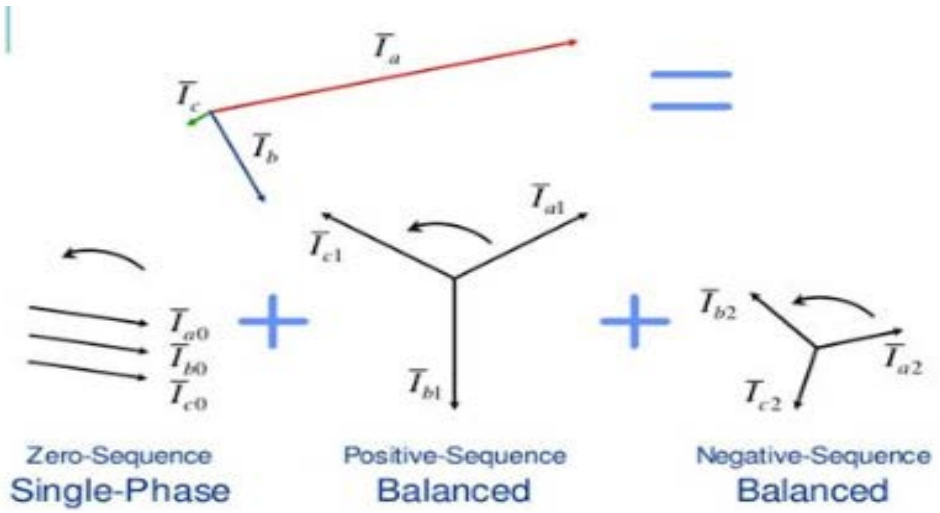

Methods to Unbalance Minimization

LOAD BALANCING

- Measuring power consumption at a bus across the feeders and switch the loads
- Use transfer switches (Eg.: three phase input-single phase output static transfer switches)
- Individual monitoring and centralized control is involved.
- Use voltage unbalance indices to control the settings of centralized controllers. (Eg.: Phase Voltage Unbalanced Rate (as per IEEE 936-1987, IEEE 112-1991), VU (ratio of negative sequence component to positive sequence component)
- Requires smart meters, central controllers, good communication network, hardware switch

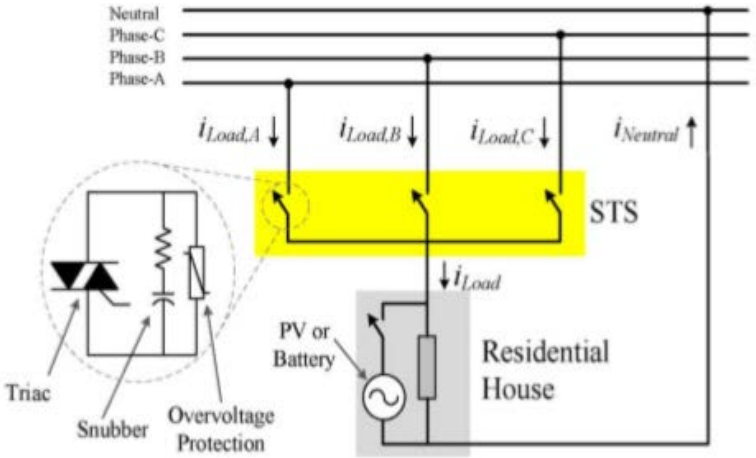

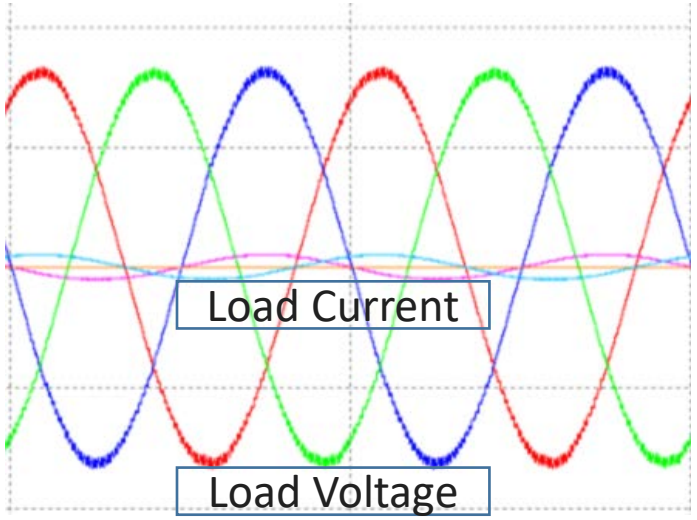

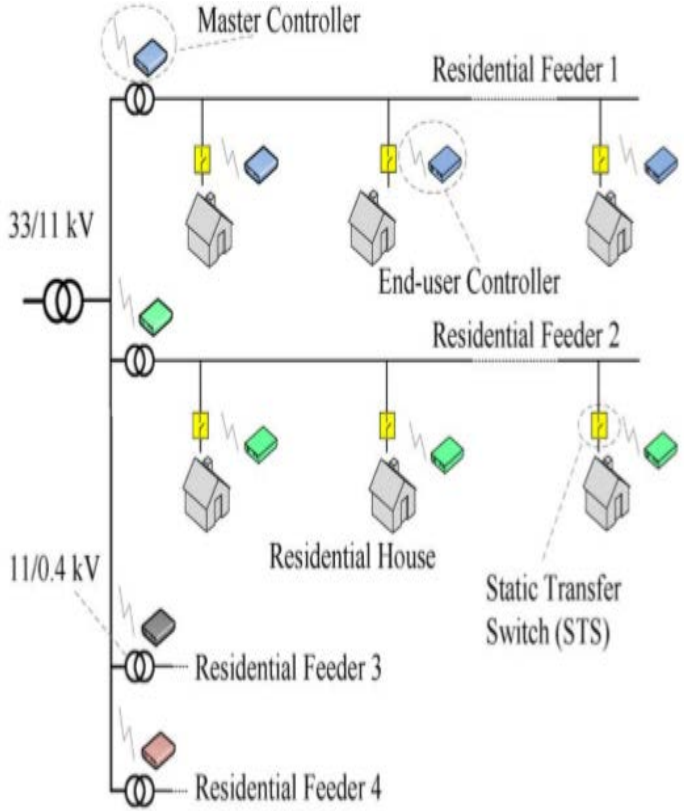

Methods to Unbalance Minimization Contd.

CONTROL OF INVERTER BASED SCHEMES

- Requirement of centralized control, communication and switching in load balancing can be reduced if smart inverters can be involved in unbalance minimization

- Smart inverters which are participating in VVC can be extended to reduce unbalances too, which can increase the performance in a dynamic environment.

- Smart inverters are quick and flexible. This can reduce the burden on network reconfiguration scheme which can even be slower in time frame.

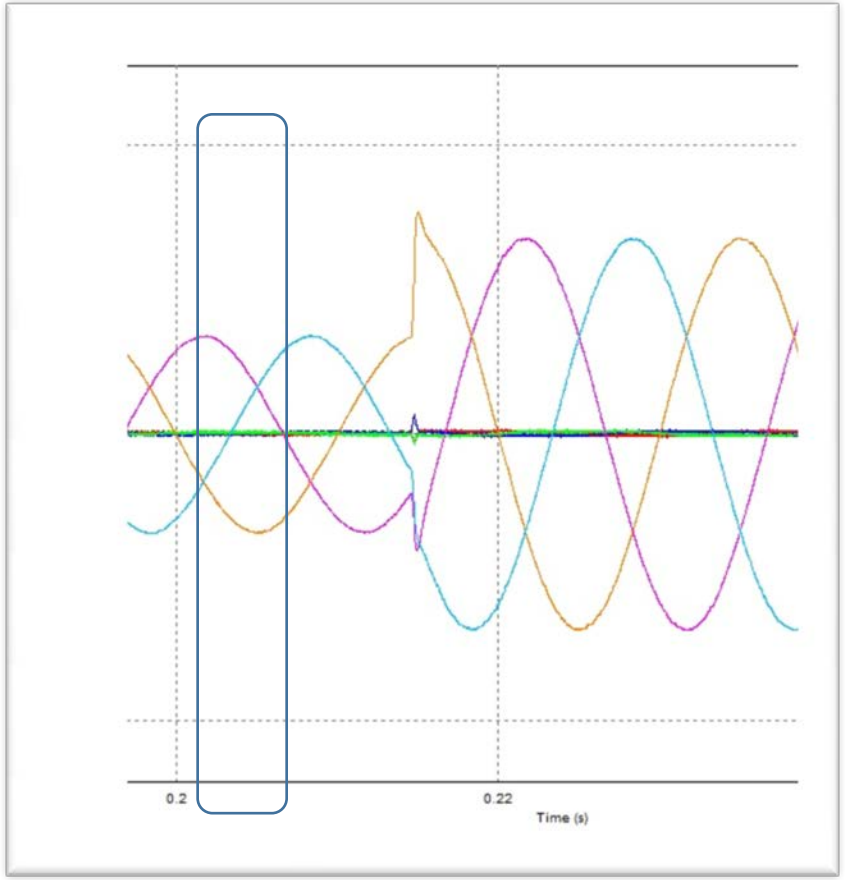

An inverter can quickly respond to a reference change as shown in the figure.

Forecasting in Distribution Networks

What?	Predict the future value of a time varying quantity
How?	Using data from past and present
	Analyze the trends in data, judgement based on experience, knowledge and judgement
Why?	Crucial for estimation, planning, control
Where?	Any parameter of importance which is time varying in nature
	Touching almost every spectrum of human interest

Distribution Load Forecasting

- Estimation for future load by an industry or utility company
- Vital for electric industry in the deregulated economy
- Essential to establish procurement policies; future fuel requirement; types of fuel requirements;
- Accurate model for electric load forecasting are essential to the operation and planning of a utility company
- Important for energy suppliers, ISOs, financial institutions, and other participants in energy distribution level
- A difficult task; load series is a complex and exhibits several levels of seasonality
- Other important exogenous variables such as weather must be considered

Forecasting periods and accuracy levels

Short term

Influencing factor

- Weather
- Events, Holidays, festivals, TV programs

Medium term

Influencing factor

- Weather
- Growth Rate
- New Customers

Long term

Influencing factor

- Weather
- Growth Rate
- New Customers
- Lifestyle Change

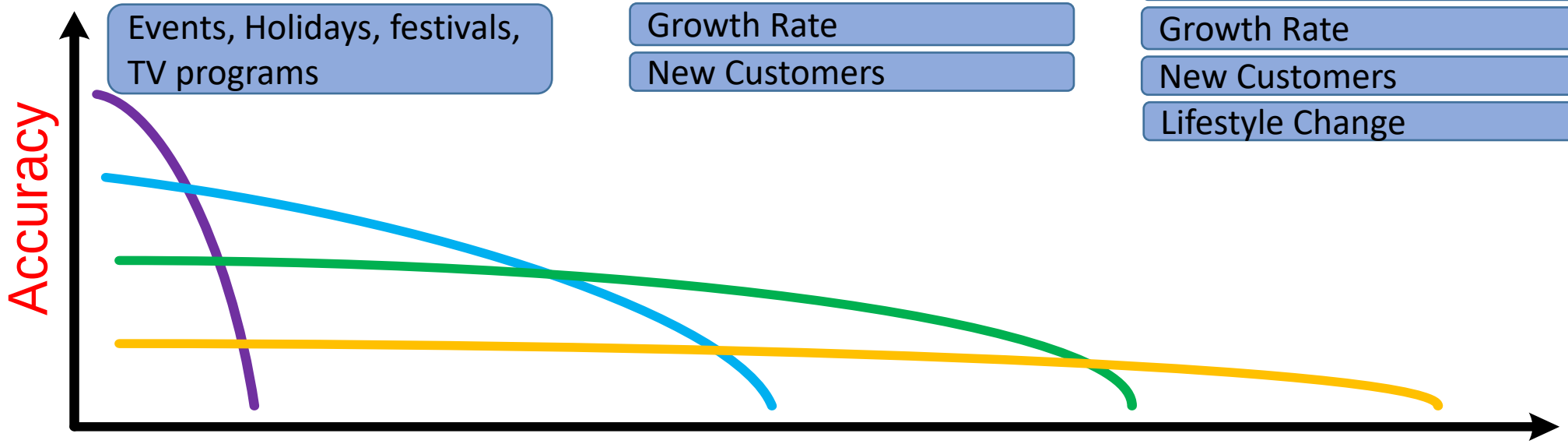

Hours/days

Benefits

- Network planning
- Supply/Demand Matching
- Spot Power Procurement
- Load Shedding Strategy

Months

Benefits

- Network planning
- Supply/Demand Matching
- Power Procurement

Years

Benefits

- Capacity/ Investment planning/ Infrastructure development
- Fuel Mix Decision

Typical Forecasting Methodologies

- Simple Time Series Model
- Regression Model
- Simpler Day Approach/ Seasonal
  - Consumption = function(season, weather) + residue
  - Seasonality can be modelled through ARIMA
  - Major seasonal component
    - Time of the day
    - Day of the week
    - Month of the year
- Machine Learning based Model (ANN, SVM, Fuzzy)

Load Forecasting Model Development

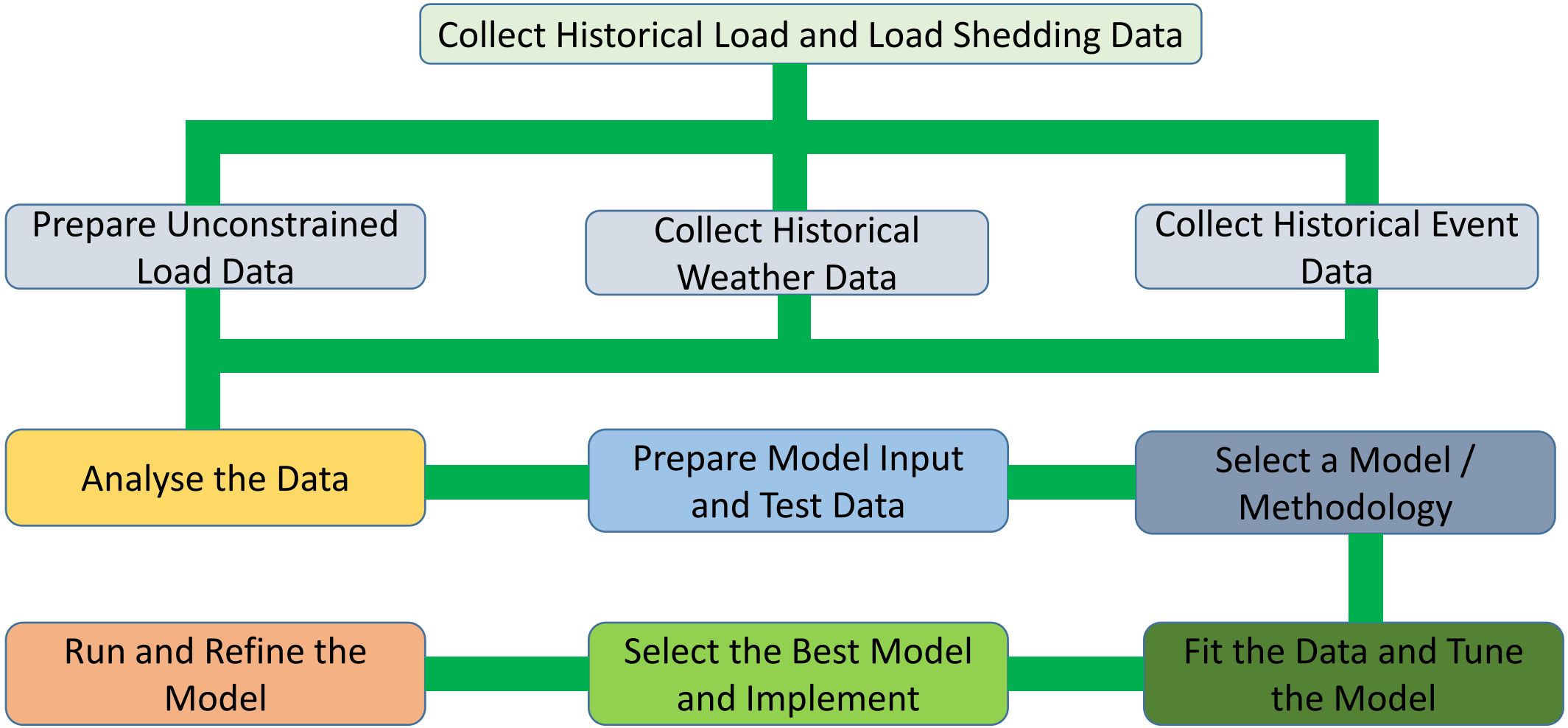

Forecasting Challenges

- Data Related Challenges
  - Lack of “good’ data
  - Selection of optimal data size
- Process and Methodology Challenges
  - Selection of appropriate model
- Technology Challenges
  - Only empirical relation exist between load and known variables
  - Correlation of load variation to other variables still unknown
- “Act of God” Challenge
  - Cannot be modelled

Flaws of forecasting models

Statistical process; individual forecast of customer do not add to total forecast

Forecasting done of unconstrained load

A combination of good data, good process, and good model; a good model alone can not give good accuracy

Accuracy improvement is a gradual process and involve significant human intervention. An automated process does not provide good accuracy on regular basis

More data does not always lead too good forecast; an optimal size of data set is important

One model does not fit all

Distribution Automation – Typical Scope

- Centralized Monitoring and Control of Distribution Networks
- Enables implementation of various DMS functions
- Load Assessment and Energy Monitoring
- Integration with Outage Management Systems (OMS)

Elements of Distribution Automation

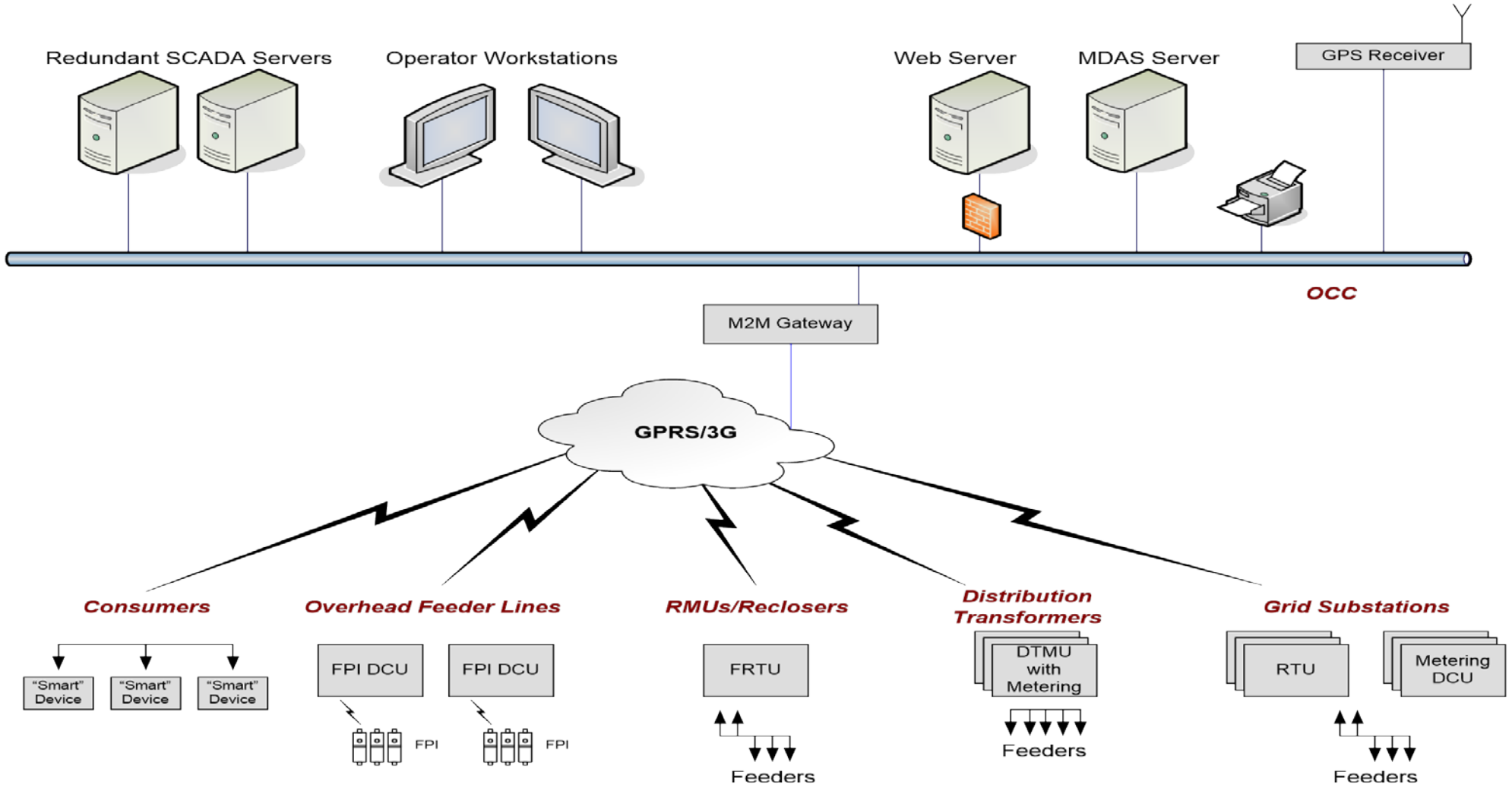

Elements of Distribution Automation

- SCADA System Infrastructure at Operations Control Centre (OCC)
- Remote Terminal Units (RTU) at Grid Substations for Remote Monitoring and Control
- Metering at Grid and Distribution Transformer (DT) Levels
- RMUs and Reclosers
- DT Monitoring Units (DTMU)
- Metering Data Acquisition Software (MDAS) and Data Concentrator Units (MDCU)
- Fault Passage Indicators (FPI) for Fault Reporting

Communication Protocols in DMS

- At Substation/MG level
  - IEC61850, IEC 60870-5-103 (for protection devices)
  - DLMS, Modbus (for metering devices)
  - IEEE C37.118 (for phasor measurements)

- At control center level
  - IEC 60870-5-104 (between RTUs, DCUs and SCADA)
  - File-based exchanges (XML, CSV, etc.)

- Inter control center
  - IEC 60870-6 aka. TASE.2 (between control centers)
  - IEC 60870-5-104 (in peer-to-peer mode)

Communication Mechanisms in DMS

- Between Field Equipment and substation gateways
  - 3G/4G
  - LoRA / eq.
  - Meshed Radio
  - Power-line Communications (PRIME, G3-PLC, etc.)
- Within substation / MG
  - Typically wired networks like RS232, RS485, Ethernet
  - Legacy systems work on hardwired I/O
- Between substation and control centers
  - Ethernet (MPLS, VSAT, leased-line, etc.)
  - 3G / 4G public networks

THANK YOU